Auxiliary Noise Power Scheduling Algorithm for Active Noise Control with On-line Secondary Path Modelling and Sudden Changes

Paulo A. C. Lopes, José A. B. Gerald

***Abstract*—In active noise control (ANC), on-line secondary path modelling can be achieved by adding a small auxiliary noise signal. If the secondary path changes are slow, then this signal can be low, but keeping the stability of the ANC system with sudden secondary path changes requires higher values for this signal, so auxiliary noise power scheduling is required. The proposed algorithm deals well with sudden (and strong) changes, due to the fast convergence of the secondary path model. It is compared with other similar algorithms in the literature. The ability to deal with different physical conditions without changing the algorithms parameters is also compared. The proposed algorithm increases the auxiliary noise to levels close to the acoustic noise when no cancelation is done and reduces it to lower levels when noise cancelation is being performed. In addition variants of the LMS that improve performance are proposed.**

***Index Terms*—Active Noise Control, On-line Secondary Path Modelling, Auxiliary Noise, Power Scheduling, LMS, FxLMS, MFxLMS, Sudden Changes.**

I. Introduction

In active noise control (ANC), [1]–[8] a sound wave of opposite phase to the original noise, the anti-noise signal, is used to cancel it out. Fig. 1 represents a block diagram of

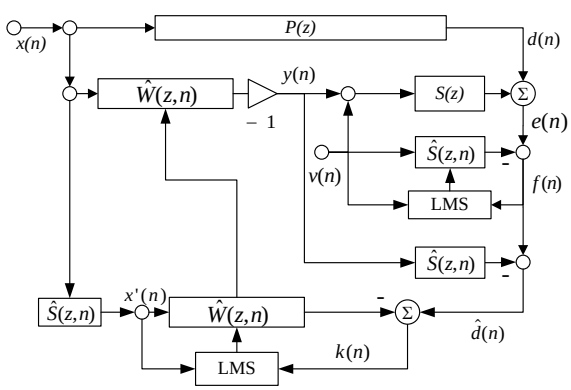

Fig. 1. Feed-forward Active Noise Control system and its signals for the proposed algorithm and others. Variants to the LMS are used in its place.

an ANC system, with some of the signals required for the proposed algorithm and other algorithms referred to in the paper. This corresponds to a feed-forward ANC system [1], [2]. In these systems the noise signal is captured early by a reference microphone resulting in the reference signal, $x(n)$. The reference signal is used by the ANC system to generate the anti-noise signal, $y(n)$, that is fed to the cancelation loudspeaker. This signal interferes destructively with the noise signal, reducing its level. The residual noise signal is then captured further down the path by the error microphone, resulting in the error signal, $e(n)$. This signal is used by the ANC system to adapt the coefficients of the adaptive filter that generated the anti-noise signal. The path from the reference microphone to the error microphone is called the primary path, $P(z)$, and the path from cancelation loudspeaker to the error microphone is called the secondary path, $S(z)$.

The most used algorithm in ANC is the Filtered-X Least Mean Squares (FxLMS). In the FxLMS algorithm, the reference signal is filtered by an estimate of the secondary path and then used as an input to the LMS algorithm. Therefore, an estimate of the secondary path is required. The modification to the FxLMS known as the MFxLMS algorithm [9] is used in the proposed algorithm and represented in Fig. 1. The MFxLMS algorithm allows for a faster step-size. The FxLMS and the MFxLMS [10] are not very sensitive to secondary path modelling errors, so, in some applications, the secondary path estimate can be obtained off-line. However, in cases where the secondary path is changing on-line, secondary path modelling is required. There are two approaches to on-line secondary path modelling: one that models the overall system [1], [2], [8] or the simultaneous equations method [11], [12], and the one with auxiliary noise [13]–[22].

In this paper, the auxiliary noise approach is adopted. In this approach an auxiliary noise signal, $v(n)$, is added to the anti-noise signal and used as input to a classical system identification task using the LMS algorithm or other to estimate the secondary path. This can be seen in Fig. 1. The auxiliary noise signal is generated from a unit variance white noise Gaussian generator followed by gain block to control its power. This allows scheduling the auxiliary noise power. In the proposed algorithm, the auxiliary noise power is selected so that its level at the error microphone will be close to the noise signal when there is no noise cancelation and will be much lower than the residual noise when noise cancelation is being performed.

II. State of the Art

In [13] the basic auxiliary noise technique is proposed. In this an auxiliary noise signal is added to the anti-noise signal and used for secondary path estimation. In [23] the overall modelling technique is compared with the auxiliary noise one. It is argued that the auxiliary noise is better because it does not require the secondary path to be re-estimated when there is a change in the primary noise frequency, as can happen with the overall modelling technique. In [14] Bao proposes the use of a filter to remove the primary noise disturbance from the secondary path adaptation. Kuo in [24] also reduces the disturbance in secondary path estimation by using a predictor filter that removes periodic disturbances from the error signal. Zhang in [15] improves [14] by using cross cancelation, removing the auxiliary noise from the adaptation of the primary noise removal filter, which would function also as a disturbance to it. In [17] Zhang compares [15] with [14]. Fujii in [11] proposes the simultaneous equations method, where the secondary path is estimated using two equations for

The authors are with the Instituto de Engenharia de Sistemas e Computadores, Investigação e Desenvolvimento, Instituto Superior Técnico, Universidade de Lisboa, INESC-ID/IST/UL, Rua Alves Redol n.9, 1000-029 Lisbon, Portugal, paulo.lopes@tecnico.ulisboa.pt

This work was supported by national funds through Fundação para a Ciência e a Tecnologia (FCT) with reference UID/CEC/50021/2013.

two values of the controller filter and does not require auxiliary noise. In [12] Fujii modifies the simultaneous equations method so that it estimates the controller filter directly instead of the secondary path. Akhtar in [18] varies the step size of secondary path estimation filter so that it is smaller at the beginning of convergence when the disturbance due to residual noise is greater, and greater at the end when the disturbance is smaller. They make it a function of the ratio of the residual noise power with the auxiliary noise removed, p_f, and the residual noise power without removal of the auxiliary noise, p_e, $\rho = p_f/p_e$. In [19] Akhtar uses ρ to schedule the auxiliary noise power, making it vary between a maximum and minimal value. Carini in [20] controls the auxiliary noise power so that the ratio of the residual noise to the auxiliary noise at the error microphone is constant. The author also uses optimal values for the step size of the secondary path and controller filters. For the secondary path, he uses the delayed coefficient technique. In [21] Ahmed proposes two algorithms. One is an On-Off algorithm that turns off the auxiliary noise when the current secondary path estimate is consistently worse than the best obtained so far, and turns it on when a large increase of the residual noise is detected. In the other algorithm, the auxiliary noise amplitude is made proportional to p_f but limited to a maximum value. In [22] Ahmed proposes a power scheduling algorithm with two stages. In stage one, before convergence, the ratio of the auxiliary noise at the error microphone to the residual noise with the anti-noise removed is made unit, similar Carini's paper. In stage two the residual noise amplitude is made proportional p_f^2 but limited, similar to his previous paper.

III. Proposed Algorithm

The proposed algorithm is presented in table I. Its simply the MFxLMS algorithm with on-line secondary path modelling, auxiliary noise power scheduling and with some modification to the NLMS. This is presented in Fig. 1. The auxiliary noise gain is given by (15), and the modifications to the NLMS are in (10) and (12). Vectors are columns vectors represented as boldface letters. $\mathbf{x}^T$ represents the transpose of $\mathbf{x}$ and $||\mathbf{x}||^2$ the square norm. Vectors $\mathbf{x}(n)$, $\mathbf{y}(n)$, $\mathbf{v}(n)$ and $\mathbf{x}'(n)$ are formed by past samples of the respective signals, as usual in the LMS algorithm and its variants [25].

The signal at the error microphone is formed by two components: the component due to the auxiliary noise signal and the remaining signal due to the primary noise and additional disturbances. The auxiliary noise power is selected so that the ratio of the two components is equal to $r(n)$, with,

$$r(n) = p_f(n)/(g^2(n)\hat{\mathbf{s}}(n)^T\hat{\mathbf{s}}(n)). \tag{16}$$

Note that the power of v_g is set to unit, that the auxiliary noise signal is $v(n) = g(n)v_g(n)$ and that $p_f(n)$ is the power of $f(n)$ for perfect secondary path model. This is similar to [20], but in our case $r(n)$ is not fixed. In fact, it is desirable that: $r(n)$ is close to unit when the system is still estimating the secondary path and there is no noise reduction, and much greater than unit when the secondary path model is accurate and there is high noise reduction. This is achieved by using (14). Note that the ratio $p_d(n)/p_e(n)$ is the noise attenuation performed by the ANC system. The minimum of $r(n)$ is set to a reasonable value of one. This means that $r(n)$ will be one as long as the attenuation is lower than $1/k_r$ and will start to increase as soon as the attenuation rises beyond this point, which is the desired effect.

Note that $p_e(n) = p_f(n)\,(r(n)+1)/r(n)$ and (16) implies that,

$$r(n) + 1 = p_e(n)/(g^2(n)\hat{\mathbf{s}}(n)^T\hat{\mathbf{s}}(n)), \tag{17}$$

and that this can be used to derive (15).

TABLE I
The proposed algorithm.

$$v(n) = g(n)v_g(n) \tag{1}$$
$$y(n) = -\mathbf{x}^T(n)\mathbf{w}(n) \tag{2}$$
$$y_1(n) = y(n) + v(n) \tag{3}$$
$$f(n) = e(n) - \mathbf{v}(n)^T\hat{\mathbf{s}}(n) \tag{4}$$
$$x'(n) = \mathbf{x}(n)^T\hat{\mathbf{s}}(n) \tag{5}$$
$$\hat{d}(n) = f(n) - \mathbf{y}(n)^T\hat{\mathbf{s}}(n) \tag{6}$$
$$p_d(n) = \lambda\, p_d(n-1) + (1-\lambda)\hat{d}^2(n) \tag{7}$$
$$k(n) = \hat{d}(n) - \mathbf{x}'(n)^T\mathbf{w}(n) \tag{8}$$
$$p_k(n) = \lambda\, p_k(n-1) + (1-\lambda)k^2(n) \tag{9}$$
$$\mathbf{w}(n+1) = \mathbf{w}(n) + \frac{\mu\,\mathbf{x}'(n)k(n)}{\mathbf{x}'(n)^T\mathbf{x}'(n) + p_k(n)} \tag{10}$$
$$a_S(n) = \frac{\mu_s\beta N_s}{2A\,\hat{\mathbf{s}}(n)^T\hat{\mathbf{s}}(n)} \tag{11}$$
$$\hat{\mathbf{s}}(n+1) = \hat{\mathbf{s}}(n) + \frac{\mu_s\,\mathbf{v}(n)f(n)}{\mathbf{v}(n)^T\mathbf{v}(n) + a_S(n)p_d(n)} \tag{12}$$
$$p_e(n) = \lambda\, p_e(n-1) + (1-\lambda)e^2(n) \tag{13}$$
$$r(n) = \max(k_r\, p_d(n)/p_e(n), 1) \tag{14}$$
$$g(n+1) = \sqrt{\frac{p_e(n)}{(r(n)+1)\hat{\mathbf{s}}(n)^T\hat{\mathbf{s}}(n)}} \tag{15}$$

Also note that $g(n+1)$ depends on $g(n)$,

$$g^2(n+1) = \frac{p_f(n) + g^2(n)||\mathbf{s}(n)||^2}{(r(n)+1)||\hat{\mathbf{s}}(n)||^2} \tag{18}$$

and that the system will become unstable if

$$\frac{||\mathbf{s}(n)||^2}{(r(n)+1)||\hat{\mathbf{s}}(n)||^2} > 1. \tag{19}$$

In the case of perfect secondary path modelling this is equivalent to $r(n) < 0$. An imperfect estimate of the secondary path vector norm can cause divergence if $r(n)$ is small.

The MFxLMS algorithm is used to update the controller filter (see (10)) and the LMS algorithm for the secondary path filter (see (12)), but with some modification to the step size. First, in both cases the algorithm used is close to the NLMS, with a normalized step size [25].

Regarding the controller filter update, the variant to the LMS used is from [26], also used in [22]. It adds the $p_k(n)$ term to calculation of the step which, for instance, helps reducing the step when the ANC is diverging.

Concerning the secondary path update, the variant of LMS used is different. It is crucial that the secondary path model is obtained fast in case of sudden changes to prevent divergence of the ANC controller. In this situation the input of the algorithm, the auxiliary noise, starts with a high value after the change and then drops to very low values. The convergence rate should be higher at the beginning and lower at the end, and this is exactly what the LMS algorithm does when the input power varies as it does [25]. The convergence rate is higher when the signal power is higher and lower when the signal power is low. The NLMS algorithm, on the other hand, has a convergence rate that is independent of the input signal power, and can have problems when the signal is very low due to the higher value of the disturbance. However, at the beginning the NLMS assures stability and fast convergence, so a combination of the LMS and NLMS is used, consisting in adding the term $q = a_S(n)p_d(n)$ to the NLMS as in (12). When the input signal $v(n)$ is high, it will dominate the new

term, resulting in the NLMS algorithm. When it is low the new term dominates, resulting in the LMS algorithm with a carefully chosen step size. The step size is chosen so that the variance of the coefficients of the secondary path estimate, σ_S^2, is low. In the cases when $v(n)$ is low (and the step size is also low) this is given by [25],

$$\sigma_S^2 = \frac{\mu_s/qJ_{\min}}{2} = \frac{\mu_s/q\, p'_f}{2} \tag{20}$$

where p'_f is the power of the residual noise with the auxiliary noise removed. This is equal to p'_d/A where p'_d is the power of the primary noise signal at the error microphone and A is the attenuation of the ANC system. The value of p'_d can be approximated by $p_d(n)$ given by (7). The variance of the secondary path estimate should be much lower than the mean of the square of its coefficients, so we chose $\sigma_S^2 = ||\mathbf{s}(n)||^2/N_S/\beta$, where N_S is the secondary estimate path length and β is chosen much greater than one. This gives,

$$q = \frac{\mu_s \beta N_S}{2A\hat{\mathbf{s}}(n)^T\hat{\mathbf{s}}(n)} p_d(n) \tag{21}$$

as in (11) and (12).

IV. Simulation Results

In this section, simulation results are presented, comparing the proposed algorithm with other similar algorithms in the literature that also use auxiliary noise power scheduling, namely: Ahmed1, algorithm I in [21], Ahmed2, algorithm II in [21], Carini [20] and Ahmed2013 [22]. Algorithm Ahmed2013 is treated separately because it also deals well with sudden secondary path changes, although its parameters are more sensitive to changes in the acoustics configuration than the proposed algorithm.

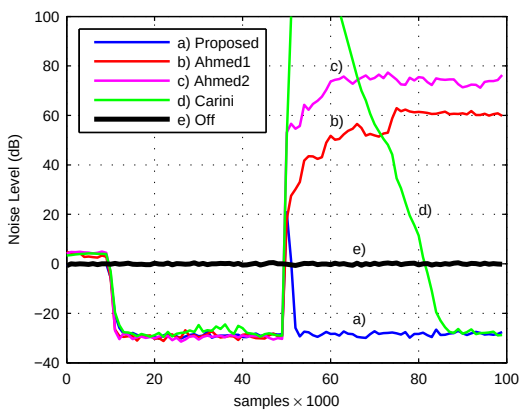

Fig. 2. Comparison of algorithms for broadband signals using a high step size that only assures convergence at the beginning.

TABLE II
Algorithms parameters for broadband signals (Fig. 2).

Proposed	$\mu = 0.5$, $\mu_S = 0.5$, $\lambda = 0.9$, $k_r = 0.1$, $\beta = 40$, $A = 10$
Ahmed1	$\mu = 0.5$, $\mu_S = 0.1$, $\epsilon = 10$, $\xi = 5$
Ahmed2	$\mu = 0.5$, $\mu_s = 0.002$. $\alpha = 0.9$, $\gamma = 0.1$, $\lambda = 0.9$
Carini	$R = 3$, $D = 16$, $\mu_{s\,\min} = 0.01$, $\hat{\lambda} = 0.7$, $\lambda = 0.9$
Ahmed2013	$\mu = 0.5$, $\mu_s = 0.1$, $\alpha = 0.99$, $\gamma_{\min} = 0.3$, $\gamma_{\max} = 0.9$, $\lambda = 0.9$

In Fig. 2 the algorithms are compared for broadband signals with a large step size for the controller filter, which allows fast convergence but does not guarantee convergence after sudden changes. The comparison is based on the evolution of the residual noise at the error microphone, $e(n)$. The parameters of the algorithms are presented in table II. These parameters were selected by trial and error in order to maximize convergence speed while assuring stability. As for the Carini algorithm, the step is optimum but a conservative value of $R = 3$ was used. The secondary path was a 64 coefficients non-minimum phase filter formed by three fractional delays implemented by sync filters with delays of 15.7, 23.3 and 18.4 and with amplitudes of 1.3, -0.3 and 0.4. The primary path was similar but with different values for the delays and amplitudes. At 50000 iterations, a delay of 5 samples was added to the secondary path, making the FxLMS unstable unless re-estimation of the secondary path was performed. All the algorithms diverged but the proposed one.

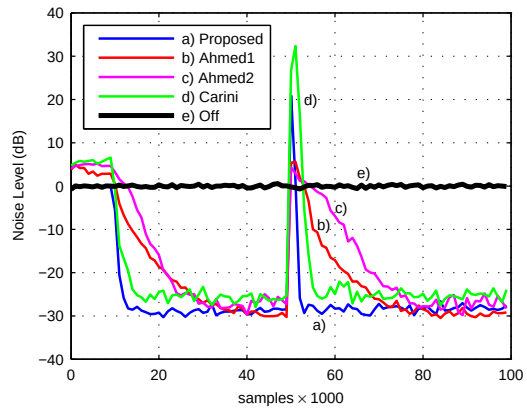

Fig. 3. Comparison of algorithms for broadband signals using a small step size that assures convergence after sudden changes.

In Fig. 3 a lower step for the controller filter was used through the algorithms, resulting in the convergence of all after the sudden secondary path change. However, all the algorithms but the proposed one and Carini's now suffered from slow convergence. In Carini's algorithm the value of R was set to one. It converged slower than the proposed algorithm had higher overshot and higher residual noise.

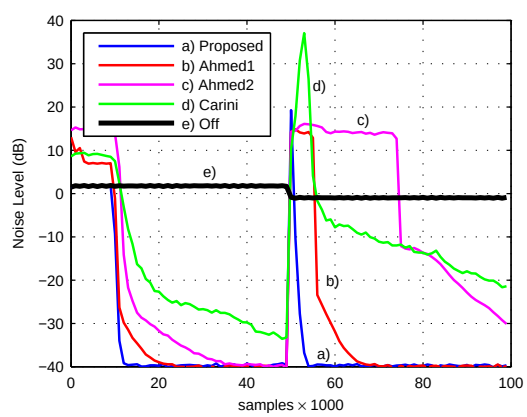

Fig. 4. Comparison of algorithms for sinusoidal signals.

In Fig. 4 the algorithms are compared with a sinusoidal reference signal and all the parameters set so that they converge after a sudden secondary path change. It can be seen that only

the proposed algorithm converges fast after the change. As for Carini's algorithm, the step size was reduced by multiplying the original value by 0.005 to make the algorithm stable.

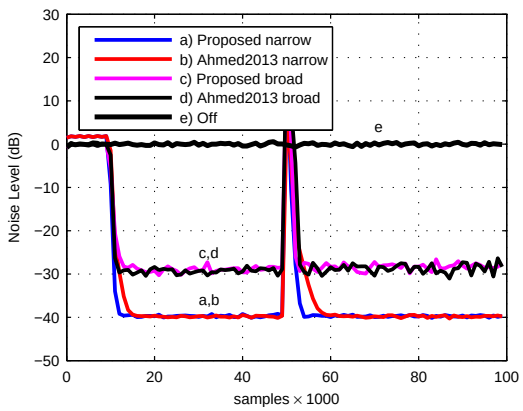

Fig. 5. Comparison of proposed and Ahmed2013 algorithms for broadband and narrowband signals.

Fig. 5 compares the proposed algorithm with Ahmed2013 for broadband and narrowband reference signals. It can be seen that both algorithm perform well.

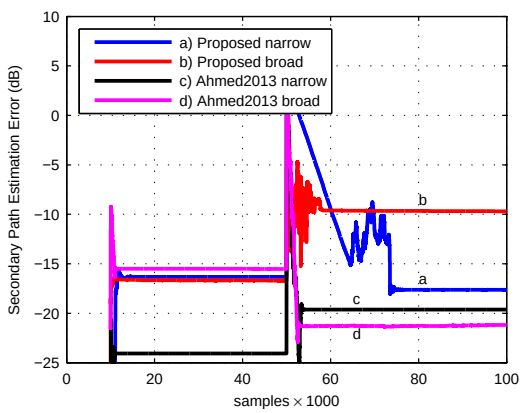

Fig. 6. Comparison of secondary path modelling error of the proposed and Ahmed2013 algorithms for broadband and narrowband signals.

Fig. 6 presents the mean square error in the secondary path estimate of the proposed and Ahmed2013 algorithms, for broadband and narrowband reference signals. The Ahmed2013 algorithm results in lower values, but this does not have correspondence in the values of the residual noise signal.

TABLE III
ALGORITHM STABILITY FOR BROADBAND SIGNALS WITH THE SAME PARAMETERS BUT DIFFERENT CONDITIONS. NUMBER OF CONVERGENT SIMULATIONS IN 100 TRIALS.

	Proposed	Ahmed2013	Carini
$x/10$	100	100	100
$10x$	100	25	100
$s/10$	100	43	99
$10s$	100	85	99
$p/10$	100	100	100
$10p$	100	99	100

Tables III and IV compare the stability of Ahmed2013 and the proposed algorithm when the physical configuration changes, but the parameters of the algorithms are kept constant. The algorithms are tested in the cases where: the reference signal level is divided by 10 ($x/10$) and multiplied by 10 ($10x$), the secondary path amplitude is divided by 10 ($s/10$) and multiplied by 10 ($10s$), and the primary path amplitude is divided by 10 ($p/10$) and multiplied by 10 ($10p$). Carini's algorithm is also presented for broadband signals where it has a performance comparable with the other two. The tables are filled with the number of convergent runs in a total of 100 trials. A trial is taken as convergent if the noise attenuation at the end is greater than 10 dB. The proposed algorithm converges in all cases for broadband signals, while Ahmed2013 does not converge in several situations. Regarding a narrowband reference they both fail to converge in several cases.

TABLE IV
ALGORITHM STABILITY FOR SINUSOIDAL SIGNALS WITH THE SAME PARAMETERS BUT DIFFERENT CONDITIONS. NUMBER OF CONVERGENT SIMULATIONS IN 100 TRIALS.

	Proposed	Ahmed2013
$x/10$	99	96
$10x$	100	91
$s/10$	30	67
$10s$	94	100
$p/10$	92	83
$10p$	100	97

V. DISCUSSION

All compared methods lack the ability to turn off the adaptation of the main controller filter when there is an incorrect secondary path model. This implies that very fast convergence of the secondary path model is required following sudden changes in order to prevent divergence.

Ahmed1 and Ahmed2 algorithms require a low step-size to be stable after sudden changes. Carini's algorithm requires a low value of $r(n)$ (one). This value still increases somewhat the residual noise. Also for a coloured reference, there may be frequencies where the auxiliary noise is much louder than the residual noise. Carini's delayed coefficient technique is not very adequate to deal with sudden changes. In addition the calculation of the step size of the controller filter does not take into account errors in the secondary path model.

Amed2013 algorithm requires tuning of its parameters to the environment. It changes to stage 2 (after convergence) when $p_f(n)$ is lower than the power of the reference signal. This seems to imply that the power of the noise signal is similar at the error and reference microphone. At stage 2, the auxiliary noise amplitude is proportional to $p_f^2(n)$ in a rather *ad hoc* way. Take the proportional constant as $\alpha(n)$. After a sudden change, $p_f(n)$ should rise until the auxiliary noise is of the order of magnitude of the residual noise, $p_f(n)$, that is,

$$p_f = (\alpha(n)\, p_f^2)^2 ||s(n)||^2 \Leftrightarrow p_f = \frac{1}{(\alpha^2(n)||s(n)||^2)^{1/3}}. \tag{22}$$

VI. CONCLUSION

A new algorithm for on-line secondary path modelling with auxiliary noise power scheduling and some variants to the LMS is proposed. The new algorithm varies the ratio of the residual noise to the auxiliary noise at the error microphone. The ratio is low when no noise cancelation occurs and high when noise cancelation is being performed. A mixture of the NLMS and LMS algorithms is used for the secondary path estimation, speeding up convergence. The algorithm is effective in dealing with sudden and strong changes in the secondary path. It is also shown that its parameters are not very sensitive to changes in the acoustics environment.

REFERENCES

[1] S. M. Kuo and D. R. Morgan, *Active Noise Control Systems, Algorithms and DSP implementations*. John Wiley and Sons, 1996.

[2] ——, "Active Noise Control: A tutorial review," *Proc. IEEE*, vol. 87, no. 6, pp. 943–973, 1999.

[3] P. Nelson and S. Elliott, *Active Control of Sound*. Academic Press, 1996.

[4] S. Elliott, *Signal Processing for Active Control*. Academic Press, 2001.

[5] ——, "Down with noise," *IEEE Spectrum*, pp. 54–61, June 1999.

[6] Y. Kajikawa, W.-S. Gan, and S. M. Kuo, "Recent advances on active noise control: open issues and innovative applications," *APSIPA Transactions on Signal and Information Processing*, vol. 1, p. e3, 2012.

[7] S. D. Snyder, *Active noise control primer*. Springer Science & Business, 2012.

[8] C. H. Hansen, *Active control of noise and vibration*. CRC Press, 2013.

[9] M. Rupp and A. H. Sayed, "Modified Fx-LMS algorithms with improved convergence performance," in *29th Asilomar Conf. Signals, Systems and Computers*, vol. 2, Los Alamitos, CA, 1995, pp. 1255–1259.

[10] P. A. C. Lopes and M. S. Piedade, "The behavior of the modified FX-LMS algorithm with secondary path modeling errors," *IEEE Signal Process. Lett.*, vol. 11, no. 2, pp. 148–151, Feb. 2004.

[11] K. Fujii and J. Ohga, "Method to update the coefficients of the secondary path filter under active noise control," *Signal processing*, vol. 81, no. 2, pp. 381–387, 2001.

[12] K. Fujii, M. Muneyasu, and J. Ohga, "Active noise control system using the simultaneous equation method without the estimation of error path filter coefficients," *Electronics and Communications in Japan (Part III: Fundamental Electronic Science)*, vol. 85, no. 12, pp. 101–108, 2002.

[13] L. J. Eriksson and M. C. Allie, "Use of random noise for on-line transducer modeling in an adaptive active attenuation system," *The Journal of the Acoustical Society of America*, vol. 85, no. 2, pp. 797–802, 1989.

[14] C. Bao, P. Sas, and H. Van Brussel, "Adaptive active control of noise in 3-d reverberant enclosures," *Journal of sound and vibration*, vol. 161, no. 3, pp. 501–514, 1993.

[15] M. Zhang, H. Lan, and W. Ser, "Cross-updated active noise control system with online secondary path modeling," *IEEE Trans. Speech Audio Process.*, vol. 9, no. 5, pp. 598–602, 2001.

[16] ——, "A robust online secondary path modeling method with auxiliary noise power scheduling strategy and norm constraint manipulation," *IEEE Trans. Speech Audio Process.*, vol. 11, no. 1, pp. 45–53, 2003.

[17] ——, "On comparison of online secondary path modeling methods with auxiliary noise," *IEEE Trans. Speech Audio Process.*, vol. 13, no. 4, pp. 618–628, 2005.

[18] M. T. Akhtar, M. Abe, and M. Kawamata, "A new variable step size LMS algorithm-based method for improved online secondary path modeling in active noise control systems," *Audio, Speech, and Language Processing, IEEE Transactions on*, vol. 14, no. 2, pp. 720–726, 2006.

[19] ——, "Noise power scheduling in active noise control systems with online secondary path modeling," *IEICE Electronics Express*, vol. 4, no. 2, pp. 66–71, 2007.

[20] A. Carini and S. Malatini, "Optimal variable step-size NLMS algorithms with auxiliary noise power scheduling for feedforward active noise control," *Audio, Speech, and Language Processing, IEEE Transactions on*, vol. 16, no. 8, pp. 1383–1395, 2008.

[21] S. Ahmed, A. Oishi, M. T. Akhtar, and W. Mitsuhashi, "Auxiliary noise power scheduling for on-line secondary path modeling in single channel feedforward active noise control systems," in *Acoustics, Speech and Signal Processing (ICASSP), 2012 IEEE International Conference on*. IEEE, 2012, pp. 317–320.

[22] S. Ahmed, M. T. Akhtar, and X. Zhang, "Robust auxiliary-noise-power scheduling in active noise control systems with online secondary path modeling," *Audio, Speech, and Language Processing, IEEE Transactions on*, vol. 21, no. 4, pp. 749–761, 2013.

[23] C. Bao, P. Sas, and H. V. Brussel, "Comparison of two on-line identification algorithms for Active Noise Control," in *Proc. Recent Advances in Active Control of Sound Vibration*, 1993, pp. 38–51.

[24] S. M. Kuo and D. Vijayan, "A secondary path modeling technique for active noise control systems," *IEEE Trans. Speech Audio Process.*, vol. 5, no. 4, p. 375, 1997.

[25] S. Haykin, *Adaptive Filter Theory*. Prentice-Hall, 1996.

[26] J. E. Greenberg, "Modified LMS algorithms for speech processing with an adaptive noise canceller," *IEEE Trans. Speech Audio Process.*, vol. 6, no. 4, pp. 338–351, 1998.