# Modeling and Optimization of the Access Impedance of Power Line Channels

Paulo A. C. Lopes, João M. M. Pinto and José B. Gerald
UT Lisboa\IST\INESC-ID,
INESC-ID, Rua Alves Redol n. 9, 1000-029 Lisboa,
Email: paulo.lopes@ist.utl.pt

***Abstract*—Digital networks can be established using the same set of wires that is used to distribute the power signal through our homes, the power-line channel (PLC). This networks have no new wires. However, the PLC channel has highly varying characteristics that need to be taken into account, namely the equivalent transmission line characteristic impedance and input impedance.**

**The impedance seen at the input of the power-line channel varies with frequency, time and from line to line. This means that for the same voltage signal the injected current will vary. The current flowing in the channel is the main source of radiated electromagnetic interference (EMI), and imposes limits on the injected signal. The amplitude of the current in the line is not equal to the input current.**

**The current peaks in the line can be minimized by minimizing the current of the positive traveling wave and it will be shown that this can be accomplished if the transmitter is coupled through a matched resistor (to the line impedance) or adequate signal processing. The signal processing method allows to easily change the access impedance. At the output of the channel the signal to noise ratio is independent of charge resistance.**

**A system with input impedance estimation and minimization of the positive wave amplitude was simulated.**[1]

## I. Introduction

The connection to the power line, present in most devices, can be used to establish a digital communications network, with no new wires [1]. Current efforts are being done for the use of the power-lines for the last mile internet access, home LAN networks, and video distribution through the home.

Power-lines on the other hand are difficult channels, since they were not designed for communications, their characteristics vary in different installations and from time to time. Multiple appliances may be connected to the line that alter its characteristics and inject different kinds of noise in the line. Many of this difficulties can be overcome through adequate signal processing techniques.

The paper focus on dealing with the varying input and output impedance of the power-lines. How to overcome this problems while maximizing the channel capacity, by maximizing the injected signal while following current and future regulations of EMC in the band up to $88\,\mathrm{MHz}$. The current in the line produces radiation, and this is limited by regulations. The current in the line is limited by the positive wave current, and this will be minimized in the paper.

[1]This work was funded by "Fundação para a Ciência e Tecnologia" project PTDC/EEA-TEL/67979/2006.

## II. Regulations

The values for the voltage and current signals in the power-lines are limited by regulations related to electromagnetic compatibility [2], EMC. The following sections present these limits and limits for current values based on the emission limits. In general, values in Europe are regulated by CENELEC norms that references IEC, CISPR 22 norm [3]. In the United States FCC Part 15 [4] is of interest to us.

### A. Limiting values due to conductive interference

In loose terms a Class B digital device is marketed for residential while Class A is for industrial. We will only refer class B vales. The norms also refer QP (Quasi-peak) values and RMS (Root Mean Square) average values. The QP are RMS processed by a quasi-peak detector with a high fall time and low rise time. The paper is only concerned with RMS values.

The limits for the signals on the mains port are from phase and neutral to ground and measured using a Line Impedance Stabilization Network (LISN), while the values at the telecommunications port are common mode and measured using an Impedance Stabilization Network (ISN). These limits are presented in table I.

| Frequency (MHz) | Mains port | Telecommunication port | |
|---|---|---|---|
| | Voltage ($\mathrm{dB}\mu V$) | Voltage ($\mathrm{dB}\mu V$) | Current ($\mathrm{dB}\mu A$) |
| 0.15 - 0.50 | 56-46 | 74 - 64 | 30 - 20 |
| 0.50 - 5 | 46 | 64 | 20 |
| 5-30 | 50 | 64 | 20 |

TABLE I
LIMITS FOR THE SIGNAL VALUE AT THE MAINS AND TELECOMMUNICATIONS PORT.

### B. Limiting values due to emission

The field strength of radiated emissions from unintentional radiators shall not exceed the values presented in table II.

### C. Measurements

CISPR 16 [5] defines measurements techniques. The values presented above should be measured using a receiver tuned at the frequency of interest and with the values for the bandwidth presented in table III (as in a spectrum analyzer) [2].

| Frequency of Emission (MHz) | Field Strength ($\mu V/m$) | |
|---|---|---|
| | CISPR (at 10 m) | FCC (at 3 m) |
| 30 - 88 | 31.6 | 100 |
| 88 - 216 | 31.6 | 150 |

TABLE II
LIMITS FOR EMISSION

| Quasi-Peak Detector | Band A | Band B | Band C | Band D |
|---|---|---|---|---|
| | 0-150 KHz | 0.15-30 MHz | 30-300 MHz | 0.3-1 GHz |
| 6 dB Bandwidth | 200 Hz | 9 KHz | 120 KHz | |

TABLE III
SIGNAL MEASURE BANDWIDTHS BY CISPR 16

### D. Possible legislation changes

Possible changes to legislation may treat the power-line as a special multi-purpose port [6]. In telecommunications ports only the common mode signal is limited, since this has the highest contribution to radiation. The common mode signal, injected by modem, is not limited, but since this signal is converted to common mode by the line, the differential signal is limited indirectly. The conversion from differential mode to common mode is given by the Longitudinal Conversion Loss (LCL) as in,

$$\mathrm{LCL} = \frac{V_{\mathrm{Diferential}}}{V_{\mathrm{Commonmode}}} \tag{1}$$

This is not exactly accurate, but applies well to PLC. LCL is expressed in dB. Power-lines have lower symmetry than telecommunications lines and so the LCL should be lower than in telecommunications ports. Also the irregular nature of the line will create zones, bends for instance, were the radiation from phase and neutral will not cancel out. A value of 36dB is being considered [6]. Also, an impedance of $150\,\Omega$ is used for telecommunications ports, while $50\,\Omega$ is used for the mains port. So for same current limit lower voltage signals results for PLC.

## III. POWER-LINE CHANNEL MODELS

Zimmermann proposed a multipath model for the power-line channel in [7]. It assumes a dispersive channel with frequency dependent attenuation. The complex amplitude of a signal that travels a distance $d$ is given by,

$$\mathrm{Zimm}(d) = e^{-(a_0 + a_1 f^k)d - 2\pi f d/c\, j}. \tag{2}$$

were $a_0$, $a_1$ and $k$ are parameters of the model, $c$ is the speed of light in the line and $f$ is frequency. So the transfer function of the line will be the sum of the several paths,

$$H(f) = \sum_i \mathrm{Zimm}(d_i). \tag{3}$$

This paper tries to improve on this model by considering the power-line channel as a two port network, which is closer to the actual physical systems and allows one to model the input impedance of the line. The line is considered as a connection of several stubs.

The parameter of the model, namely $a_0$, $a_1$ and $k$, will be taken from the $100m$ line in [7], although used for other lengths, since they are more or less independent of the line length.

### A. Stub-less transmission line

The signal injected in the power-line channel is usually inserted in the pair of wires between the phase and neutral conductor, so this medium functions as a transmission line. However, the conductor distance, dielectric and conductor properties are not well defined, resulting in a varying impedance and reflections through the line.

The following equations represent the voltage and current signal in a transmission line [8].

$$V_0 = A + B \tag{4}$$
$$V_1 = A\, e^{-(\alpha+\beta\, i)\, l} + B\, e^{+(\alpha+\beta\, i)\, l} \tag{5}$$
$$I_0 = A/Z_0 - B/Z_0 \tag{6}$$
$$I_1 = A/Z_0\, e^{-(\alpha+\beta\, i)\, l} - B/Z_0\, e^{+(\alpha+\beta\, i)\, l}. \tag{7}$$

They represent the waves traveling in the positive and negative directions. The voltage and current at the near end of the line are $V_0$ and $I_0$, while the voltage and current at the far end of the line, at a distance of $l$ are $V_1$ and $I_1$. The positive and negative wave amplitudes are $A$ and $B$, $\alpha$ is the attenuation constant and $\beta$ is the angular wavenumber.

### B. Two-port models

Using the formulae presented, it is possible to derive a two-port model for the line. Consider the circuit in figure 1. It can be made to represent a stub-less transmission line were 0 is the near end and 1 is the far end. This circuit can be represented


Fig. 1. A two-port network circuit with the indication of the current and voltage signals.

by a two-port network, using the hybrid parameters as,

$$\begin{pmatrix} V_1 \\ I_0 \end{pmatrix} = \begin{pmatrix} \mathrm{Av} & Z_0 \\ G_1 & \mathrm{Ag} \end{pmatrix} \begin{pmatrix} V_0 \\ I_1 \end{pmatrix}. \tag{8}$$

The hybrid parameters were chosen because they have a simple physical connection. Note that the inverse of the matrix is itself. Considering a frequency dependent attenuation as in

the Zimmermann model results in the following model.

$$\mathrm{Av}(t) = \mathrm{sech}\left(l\left(a_1 f^k + \frac{2\pi f}{c} i + a_0\right)\right) \tag{9}$$

$$Z_0(t) = Z \tanh\left(l\left(a_1 f^k + \frac{2\pi f}{c} i + a_0\right)\right) \tag{10}$$

$$G_1(t) = \frac{\tanh\left(l\left(a_1 f^k + \frac{2\pi f}{c} i + a_0\right)\right)}{Z} \tag{11}$$

$$\mathrm{Ag}(t) = -\mathrm{sech}\left(l\left(a_1 f^k + \frac{2\pi f}{c} i + a_0\right)\right) \tag{12}$$

The characteristic impedance and speed of light in the air are $Z = \sqrt{\mu/\varepsilon} = 376.73\,\Omega$ and $c = 1/\sqrt{\mu\varepsilon} = 2.99792 \times 10^8\, m/s$. The characteristic impedance of a transmission line depends of the dielectric and the geometry of the line. If $d$ is the distance between the centers of the two conductors and $a$ is the radios of the conductors then the impedance varies according to table IV.

| d/2a | 1 | 1,1 | 1.2 | 1.3 | 1.4 | 1.5 | 1.6 | 1.7 |
|---|---|---|---|---|---|---|---|---|
| Air | 0 | 53 | 75 | 91 | 104 | 115 | 126 | 135 |
| PVC | 0 | 30 | 42 | 51 | 58 | 65 | 70 | 75 |

TABLE IV
CHARACTERISTIC IMPEDANCE OF A TRANSMISSION LINE ($Z_0$ IN $\Omega$) AS A FUNCTION OF THE LINE GEOMETRY AND DIELECTRIC.

Through the paper a value of $50\Omega$ will be used for the characteristic impedance of the lines since this is the impedance of an LISN. Figure 2 represents the variation of the hybrid parameter $Z_0$ with frequency for lines with $1m$, $2m$, $10m$ and the 4-stub model of the following section.

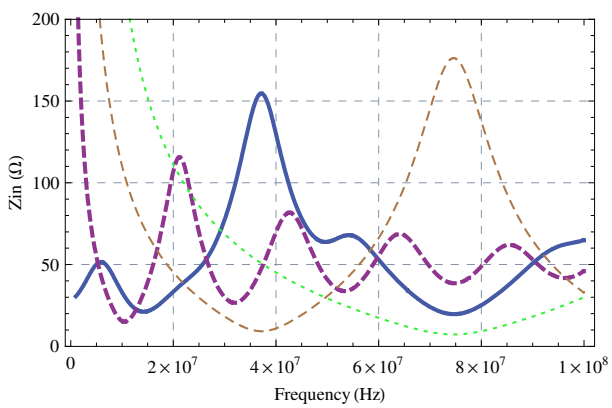


Fig. 2. Input impedance of the model. Thick-blue is 4-stub, thick-dashed-purple is $9m$ stub, thin-dashed-brown is $2m$ and thin-dotted-green is $1m$.

### C. Multiple stub lines

In this section more realistic multi-stub lines are considered. Any configuration can be modeled using a set of stubs connected and each modeled by a biport model. As an example the 4-stub system in figure 3 will be considered. Each stub was labeled from 1 to 4. For stub $i$ the voltage at its input (at the left) will be refereed to as $V_{0i}$ and at the output (the right) will be $V_{1i}$. The current that enters the stub will be $I_{0i}$ at the left and $I_{1i}$ at the right. Taking this into consideration one has,

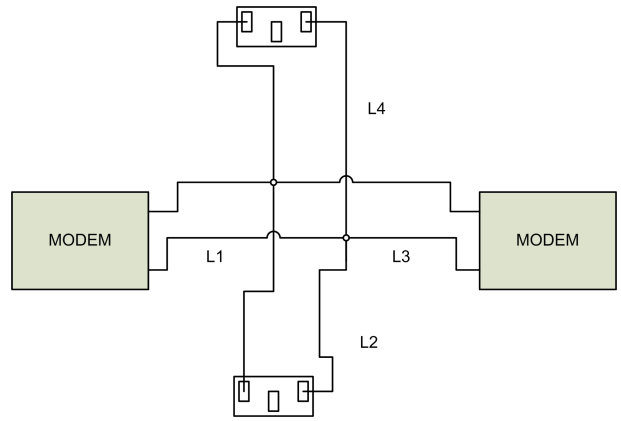


Fig. 3. A power line configuration with 4 stub-less lines.

$$I_{12} = 0;\ I_{14} = 0;\ I_{11} = -(I_{02} + I_{03} + I_{04}) \tag{13}$$

$$V_{02} = V_{11};\ V_{03} = V_{11};\ V_{04} = V_{11} \tag{14}$$

$$I_{13} = -V_{13}/R, \tag{15}$$

These equations together with the biport models allow one to obtain a model for the 4-stub example. Of interest to us is the overall voltage gain or transfer function, $Av(f) = V_{13}/V_{01}$ and the input impedance $Z_{in}(f) = V_{01}/I_{01}$.

At the modem the line will be terminated by $25\Omega$. This is different from the characteristic impedance of the line to account for typical mismatch that will occur in practice. The resulting transfer function is plotted in figure 4 and impulse response is plotted in figure 5.

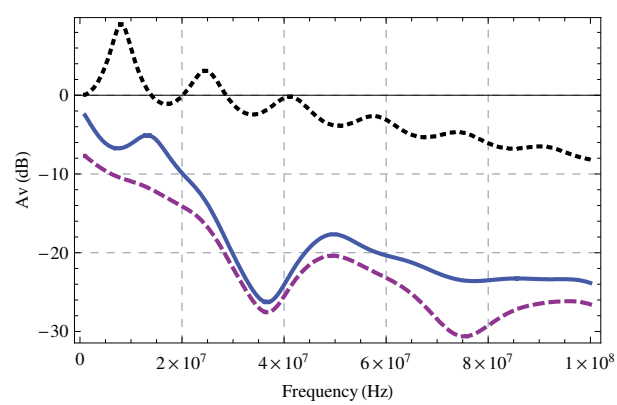


Fig. 4. Voltage gain. Thick-blue is 4-stub, thick-dashed-purple 4-stub with a $25\Omega$ access impedance and dotted black is a $9m$ open termination stub.

### D. Noise levels

The receiver noise level used trough the paper was set to $-140\mathrm{dB}V$ as used in [9]. In [10] a study of the noise of different appliances is made and the results are in agreement with [9]. The noise level is represented in figure 6.

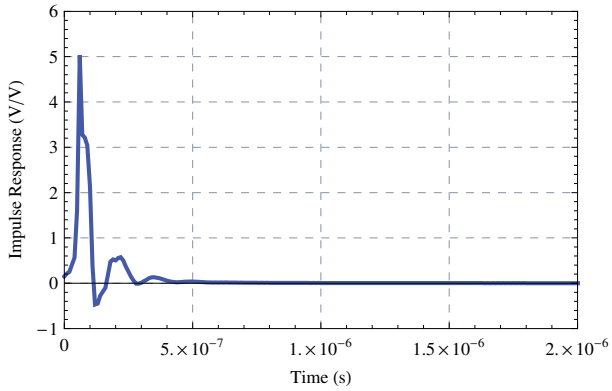


Fig. 5. Impulse response of the model.

## IV. Limiting Input Current vs Positive Wave

The current in the transmission line is the sum of a positive traveling wave and a negative traveling wave as represented in (7). This implies that its amplitude is not constant and is not equal to the input current of the line. Instead it forms a standing wave. The peaks of this wave will occur when the current of the positive wave and negative wave are in phase. Since the amplitude of the negative wave ($B/Z_0$) will be always lower than the amplitude of the positive wave ($A/Z_0$), this can be limited by $2A/Z_0$.

Limiting positive wave current amplitude ($I_+ = A/Z_0$) can be accomplished by signal processing. Summing (4) and $Z_0$ times (6) results in $A = V + Z_0 I$. Solving for V and using $Z_{\text{in}}$ results in,

$$V = I/(Z_0^{-1} + Z_{\text{in}}^{-1}), \tag{16}$$

were the parallel of the two impedances is used. This is exactly the same result obtained if the line is accessed with a resistance of impedance $Z_0$ (a matched resistor).

However, $Z_0$ varies through the line and from line to line. A typical value of $50\Omega$ as used in LISN can be used.

## V. A legislation implementation

Two scenarios were chosen for evaluation. In the first, no legislation changes are considered in the band from 5MHz to 30MHz, and for the band from 30MHz to 88MHz a conservative value of 0dB was used for the LCL. In the second, legislation changes were considered, and an LCL of 36dB was used in the full band from 5MHz to 88MHz band.

The paper deals with the power spectral density (PSD) values of the signals, but since we are only interested in positive frequencies $2 \times PSD$ will be used. The square root results in $\text{RMS}/\sqrt{\text{Hz}}$. The limits for the signal are presented in table V.

Current legislation has no limit for the current under 30MHz, so a reasonable value was chosen, calculated using a $10\Omega$ resistance.

In the 30-88MHz band only the radiated signal is limited. Also there isn't much work on the LCL factor. However, results in [6] indicate that it is constant in the range from 5MHz to 30MHz so we will assume that it remains constant

| | Current 30MHz $\mu A/\sqrt{\text{Hz}}$ | Voltage 30MHz $\mu V/\sqrt{\text{Hz}}$ | Current 88MHz $\mu A/\sqrt{\text{Hz}}$ | Voltage 88MHz $\mu V/\sqrt{\text{Hz}}$ |
|---|---|---|---|---|
| Current Legislation | 0.33 | 3.3 | 0.029 | – |
| Legislation changes | 7.03 | 1050 | 1.823 | – |

TABLE V
Legislation implementation limits.

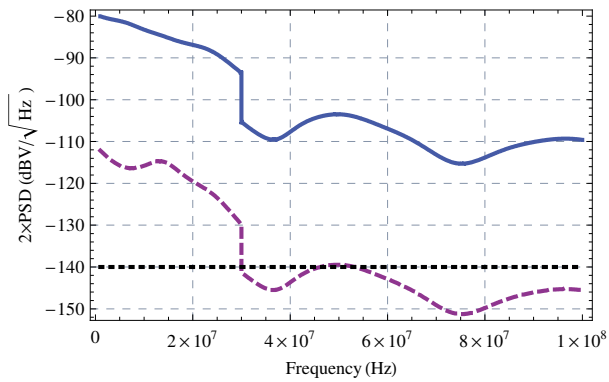


Fig. 6. Signal and Noise levels. Thick-blue is with legislation changes, dashed-purple is without legislation changes and dotted-black is the noise level.

for higher frequencies. We will use the limits for the radiated field to calculate limits for the current in the line.

The current along the line is not constant, but follows (7). The radiated electric field from a line section in the direction of greater radiation is given by [11],

$$E(t) = \int_0^\infty j \frac{Z_0 \beta_0}{4\pi} \frac{I(x)}{r} e^{j(\omega t - \beta_0 r)} dx \tag{17}$$

were $r$ is the distance from the measuring point to the point of the line at position $x$, $\omega$ is the frequency in radians/s, and $I(x)$ is the current in the line, formed by the subtraction of the current of the positive traveling wave, $I_+(x)$, and the current of the negative traveling wave, $I_-(x)$. The air wave number is $\beta_0$ as opposed to the line wave number $\beta$. The electric field can be considered as a superposition of the field generated by the positive wave current, $E_+$ and negative wave current $E_-$, $E = E_+ + E_-$. Since the negative wave results from the reflections of the positive wave its amplitude is always lower, and so, $|E| < |E_+| + |E_-| < 2|E_+|$. The distance $r$, in the far field, is given by,

$$r = \sqrt{r_0^2 + x^2} \approx r_0 \left(1 + \frac{x^2}{2r_0^2}\right) \approx r_0. \tag{18}$$

Using the formula for $I_+(x)$ in (7) and integrating results in

$$|E_+| < \left| \frac{j \frac{Z_0}{Z} \frac{A \beta_0}{4\pi}}{\alpha + \beta j} \right| / r_0. \tag{19}$$

In the expression $\alpha$ is always much lower than $\beta$. Using the values for the attenuation from [7] we have that both $\alpha$ and $\beta$ increase with frequency, but from $5\,\text{MHz}$ to $88\,\text{MHz}$, $\beta$ varies from $0.105$ to $1.84$ and $\alpha$ varies from $0.0299$ to $0.358$.

So $\alpha$ can be removed from the summation. Using $\beta > \beta_0$, $I_+ = A/Z$ and $I < 2I_+$, results in,

$$|E| < \frac{Z_0\, I}{4\pi r_0} \tag{20}$$

The values from FCC and CISPR in table II are both approximately equal to $100\mu V/m$ after conversion to $r_0 = 3\,m$. Using this and (20), results in the values in table V.

Imposing the current limits, $I < I_{\max}$, can be accomplished using (16) resulting in,

$$V < I_{\max}/(Z^{-1} + Z_{in}^{-1}) \tag{21}$$

## VI. Receiver Impedances

The signal to noise ratio at the receiver is given by,

$$\text{Signal/Noise} = \frac{V_s\, Z_n}{V_n\, Z_s} \tag{22}$$

were $V_s$, $Z_s$, $V_n$ and $Z_n$ are the voltage and impedance of the Thevenin equivalent of the signal and noise sources respectively. This is independent of the receiver impedance. However, using a matched impedance reduces reflections in the line.

## VII. Adaptive modulation

### A. Bit loading

An OFDM system can be interpreted as a multicarrier system composed of several subcarriers, one for each bin of the DFT operation. For each subcarrier the system behaves as simple QAM modulation system. In order to achieve maximum performance the number of bits and the signal level in each subcarrier can be made dependent on the signal to noise for that subcarrier. The FFT operation at the receiver in fact implements a bank of matched filters for all signals in all subcarriers. The received signal for one subcarrier is:

$$r_0(t) = a\, s_R(t) + w_R(t) + b\, s_I(t)\, i + w_I(t)\, i \tag{23}$$

Where $a$ and $b$ are the real and imaginary coefficients for the M-QAM constellation (for M power of 4, namely 4-QAM, 16-QAM, 64-QAM, 256-QAM, etc), witch take the values $\{\ldots, -5, -3, -1, 1, 3, 5, \ldots\}d/2$, with $d$ representing the minimum distance between points of the constellation. The variables $s_R(t)$ and $s_I(t)$ are the truncated cosine and sine symbols respectively; $w_R(t)$ and $w_I(t)$ are the real and imaginary noise terms of a Gaussian white noise process [12] with variance $\sigma$ and zero mean. Note that the noise variance can be obtained from $\sigma^2 = N_0\, W$, where $N_0$ is two times the power spectral density of the noise and $W$ is the bandwidth of the channel. After the matched filters, that is, at the output of the FFT operation and disregarding the noise terms, and since $s_R(t)$ and $s_I(t)$ are orthogonal, the sampling of the output signals at time $t = 0$ results in,

$$r_1(0) = r_R(0) + r_I(0)\, i \tag{24}$$

with $r_R(0) = a\, E_s$, $r_I(0) = b\, E_s$ and

$$E_s = \int_{-\infty}^{\infty} s_R^2(t)\, dt = \int_{-\infty}^{\infty} s_I^2(t)\, dt \tag{25}$$

results in, $r_R(0) = a\, E_s$ and $r_I(0) = b\, E_s$. The power of the received signal is given by,

$$S = \mathrm{E}[|r_1(0)|^2] = \mathrm{E}[a^2]\, E_s^2 + \mathrm{E}[b^2]\, E_s^2 \tag{26}$$

The operator E[.] stand for expected value. If all point in the constellation are equally probable then,

$$\mathrm{E}[a^2] = \mathrm{E}[b^2] = \sum\{\ldots(-3)^2, (-1)^2, (1)^2, (3)^2 \ldots\}\times \times \frac{(d_{\min}/2)^2}{N} = \frac{M-1}{12}\, d_{\min}^2 \tag{27}$$

where $M = N^2$. So for M-QAM the average received signal power is given by,

$$S = \frac{M-1}{6}\, d_{\min}^2\, E_s^2 \tag{28}$$

The noise power is given by N=E$[w_R^2(t) + w_I^2(t)] = 2\,\sigma^2$. The probability that a Gaussian noise variable exceeds half of the distance between adjacent constellation points is,

$$P_X = Q\left(\frac{E_s\, d_{\min}}{2\,\sigma}\right) \tag{29}$$

where,

$$Q(x) = \frac{1}{\sqrt{2\,\pi}} \int_x^{\infty} e^{-x^2/2}\, \mathrm{d}x \tag{30}$$

The probability of a symbol error is equal to the probability of a wrong decision for the real or imaginary component of the signal. The probability of error in a given direction (real or imaginary) is equal to the probability of error of an N-PAM ($M = N^2$) signal. This error probability is equal to $2\,P_X$ for the $N-2$ inner points and to $P_X$ for the two outer points so the average probability of error is given by,

$$P_{\mathtt{PAM}} = \frac{2\,(N-1)}{N}\, Q\left(\frac{E_s\, d_{\min}}{2\,\sigma}\right) \tag{31}$$

and the probability of symbol error is given by $P_e = 2\,P_{\mathtt{PAM}}$, Note that for gray coding the bit error probability is equal to the symbol error probability per dimension, so $P_{\mathtt{bit\ error}} = P_e/2$. Now one can define, the SNR gap, $\Gamma$, as

$$3\Gamma = \frac{E_S^2\, d_{\min}^2}{4\sigma^2} \tag{32}$$

which results in,

$$P_e = \frac{4\,(N-1)}{N}\, Q\left(\sqrt{3\Gamma}\right) \tag{33}$$

From the formula for the M-QAM signal power, $S$, and making $2^b = M$, one can obtain,

$$b = \log_2\left(1 + \frac{S/N}{\Gamma}\right) \tag{34}$$

where $b$ is the number of bits per QAM symbol. $\Gamma$ represents the gap in the signal to noise ratio that separates the bit rate from the maximum achievable capacity given by the Shannon's formula. Note that the error probability in (33) is for encoded signals.

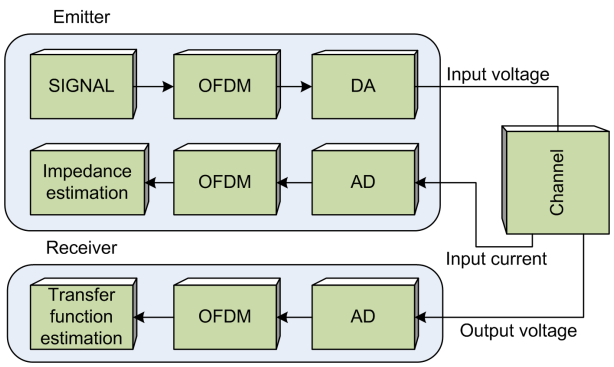


Fig. 7. Simplified block diagram of the proposed system for impedance and channel transfer function estimation.

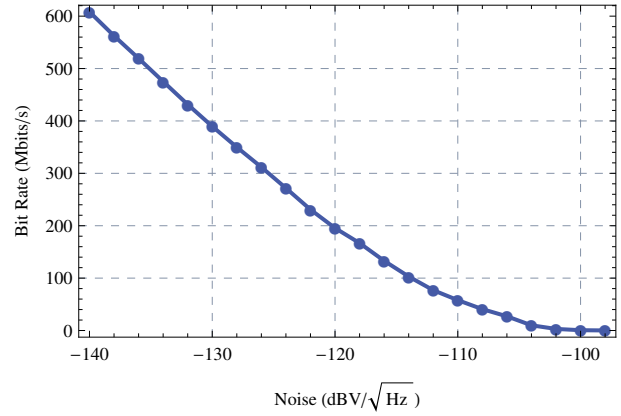


Fig. 8. Bit-rate for different values for the receiver noise.

### B. Probing signals

The Zadoff-Chu sequences have optimum correlation properties and are a special case of generalized chirp-like polyphase sequences [13] [14]. They are also known as a CAZAC (Constant Amplitude Zero Autocorrelation) sequence. Note that the sequences have complex values in the time domain. They are defined as:

$$S(k) = \begin{cases} e^{-i\frac{(2\pi r)}{N}\left(\frac{k^2}{2}+kq\right)} & N \text{ even} \\ e^{-i\frac{(2\pi r)}{N}\left(\frac{k(k+1)}{2}+kq\right)} & N \text{ odd} \end{cases} \tag{35}$$

where $q$ is any integer, $k = 0, ..., N-1$ and $r$ is any integer relatively prime to $N$. Two numbers are relative primes if the greatest common divisor (gcd) is one, so $r = 1$ is always a solution. Their autocorrelation is zero for $n \neq 0$ and the time domain amplitude is one. If $N$ is odd then the cross-correlation between two sequences formed using two different values for $r$ is $\sqrt{N}$ [14]. This is a minimum for the cross-correlation of two zero autocorrelation sequences. If $N$ is a prime number then the sequences for different values for $r$ are all CAZAC and form the Zadoff-Chu set.

The parameters values used in the project were $r = 1$, $N = 1024$ and $q = 0$.

## VIII. Simulations

A system, as shown in figure 7, with impedance estimation and limitation of the PLC positive wave current according to legislation was simulated. The system uses adaptive QAM-OFDM as described in section VII, similar to the one in [9] with a constant SNR-GAP of 5.57dB. The 4-stub PLC model (section III-C) was used for the channel.

The input impedance was estimated at the same time as the channel estimate by measuring the input current using the AD also present in the emitter.

The results are as expected. They are shown in figure 8 were the values of the bit-rate are plotted for different values of the measurement noise. The bit error rate was around $10^{-5}$. No error correction was used.

## IX. Conclusion

The characteristic impedance and the input impedance of a power-line varies from line to line. This means that the current in the line varies for the same injected signal. The current in the line determines the radiation from the line and this is the factor that limits the injected signal as ruled by EMC regulations, namely CISPR and FCC standards. More accurately the radiation is limited by the positive wave current, since negative wave is always smaller. The radiation from the positive wave can be minimized using the value of the input impedance or by accessing the line by a matched resistor. However, using the input impedance allows easy change of the line characteristic impedance. At the output of the channel the signal to noise ratio is independent of receiver impedance. A system with input impedance estimation was simulated.

## References


[1] M. R. Matthias Gtz and K. Dostert, "Power line channel characteristics and their effect on communication system design," *IEEE Communications Magazine*, vol. 42, no. 4, pp. 78–86, 2004.

[2] T. Williams, *EMC for product designers*, 4th ed. Newnes.

[3] *CISPR 22, Information technology equipment - Radio disturbance characteristics - Limits and methods of measurement*, 3rd ed. International Electrotechnical Commission (IEC), 1997.

[4] *FCC Part 15, Radio Frequency Devices*. Federal Communications Commission (FCC), 2008.

[5] *CISPR 16-1-1, Specification for radio disturbance and immunity measuring apparatus and methods*, 2nd ed. International Electrotechnical Commission (IEC), 2007.

[6] M. Ianoz, "Standardisation problems related to conducted limits for power line communication equipment," in *IEEE International Symposium on Electromagnetic Compatibility, EMC 2003*, Istanbul, Turkey, 2003.

[7] M. Zimmermann and K. Dostert, "A multipath model for the powerline channel," *IEEE Transaction on Communications*, vol. 50, no. 4, 2002.

[8] D. M. Pozar, *Microwave Engineering*. John Wiley & Sons, Inc., 2005.

[9] P. Langfeld, "The capacity of typical power line channels and strategies for system design," in *Proc. 5th Int'l. Symp. Power-Line Commun*, Malm, Sweden, 2001.

[10] H. Meng and Y. L. Guan, "Modeling and analysis of noise effects on broadband power-line communications," *IEEE Transaction and Power Delivery*, vol. 20, no. 2, pp. 78–86, 2005.

[11] C. A. Balanis, *Antenna theory : analysis and design*. John Wiley & Sons, Inc., 1997.

[12] S. M. Ross, *Introduction to Probability and Statistics for Engineers and Scientists*, thirs ed. Elsevier Academic Press, 2004.

[13] D. C. Chu, "Polyphase codes with good periodic correlation properties," *IEEE Transactions on Information Theory*, 1972.

[14] B. M. Popovic, "Generalized chirp-like polyphase sequence with optimum correlation properties," *IEEE Transaction on Information and Theory*, vol. 38, no. 4, pp. 1406–1409, 1992.